SAMSUNG

SUBMITTAL AR24CSDABWKNCV (RNS24ABC) For Multi-Zone Systems

Samsung WindFree™* 3.0, wall mounted evaporator

Job Name _____ Location _____

Purchaser _____ Engineer _____

Submitted to _____ Reference ☐ Approval ☐ Construction ☐

Unit Designation _____ Schedule # _____

Specifications

Model	US Code		RNS24ABC
	Model Number		AR24CSDABWKNCV
Performance	Nominal Capacity	Cooling (Btu/h)	21,000
		Heating (Btu/h)	25,000
Power	Voltage	ø / V / Hz	1 / 208-230 / 60
	Operating Current (Max.)	Cooling (A)	0.5
		Heating (A)	0.5
Evaporator Fan	Type		BLDC motor with cross-flow fan
	Consumption	Watts	27
	FLA	Amps	0.12
Airflow	Air Volume (L/M/H/Turbo)	Cooling (CFM)	445 / 533 / 621 / 713
		Heating (CFM)	445 / 533 / 622 / 713
Refrigerant	Type		R410A
	Control Method		Electronic Expansion Valve
Pipe Connections	Indoor & Outdoor	High side (flare)	1/4"
		Low side (flare)	5/8"
	Condensate Connection		11/16" OD
Dimensions	W X H X D (in.)	Indoor Unit	41-9/16 x 11-3/4 x 8-7/16
	Weight (lbs.)	Indoor Unit	27.6
Sound Pressure Level	Low / High	dB(A)	47 / 28
Accessories	Wired Controllers	Advanced	☐ MWR-WG00UN
		Simple Touch	☐ MWR-SH11UN
	Wired Controller Sub-PCB		☐ MIM-A00UN
	24VAC Thermostat Adapter		☐ MIM-A60UN
	Condensate Pump	Aspen Mini Orange	☐ ASP-MO-UNIV 110-250
		Blue Diamond	☐ BD-BLUE-230
	External Temperature Sensor		☐ MRW-TA
	External Contact Control Card Interface		☐ MIM-B14
	Line Sets - insulated and flared; interconnect cables included		☐ 25' - ILS2509
			☐ 50' - ILS5009
Safety	Certifications	UL 60335-2-40	

*The WindFree™ unit delivers an air current that is under 0.15 m/s while in WindFree™ mode. Air velocity that is below 0.15 m/s is considered "still air" as defined by ASHRAE (American Society of Heating, Refrigeranting, and Air Conditioning Engineers).

**For reference only; not revenue grade.

[1]Sub-PCB model MIM-A00UN is required when connecting optional wired controllers or MIM-A60UM 24VAC thermostat adapter.

[2]When applying MIM-B14 external contact control interface module, MIM-A00UN wired controller sub-PCB is required.

Samsung HVAC maintains a policy of ongoing development. Specifications are subject to change without notice. Refer to www.AHRIdirectory.org for current reference numbers.

General Information
- The indoor unit shall feature WindFree™* mode. In cooling mode, as room temperature nears set temperature, the unit will close its louver and will disperse air into the space through thousands of micro-holes on the front of the indoor unit preventing cold air drafts on occupants.
- The indoor unit shall have Wi-Fi capability as standard.
- The indoor unit shall be powered by the outdoor unit
- Built-in motion sensor for airflow direction control and energy saving operation.

Construction
- Indoor unit chassis shall be UL94 V0 with a galvanized steel mounting bracket
- The indoor unit shall have easy-access to wire, pipe, and drain connections via access panel on the bottom of the unit for simple installation and service

Heat Exchanger
- The heat exchanger shall be mechanically bonded fin to copper tube

Indoor Fan
- The indoor fan shall be a single, antibacterial cross-flow type
- Three fan speed settings and auto setting
- Automatic (motorized) vertical swing (up/down) and horizontal swing (left/right) louvers

Controls
- The system shall have a built in Wi-Fi adapter as standard to allow control and monitoring using the Samsung SmartThings app (Android, iOS)
- Dual set temperature support when connected to MWR-WG00UN Advanced Wired Controller.
- The indoor unit shall have a simple connection for overflow detection devices or any other normally closed contact for simple unit shutdown
- The indoor unit shall ship with a wireless controller, holder, and batteries
- Wired controller options available
- Samsung central control compatible (MIM-R10UN accessory required)
- Interconnect control wire between outdoor and indoor unit shall be 16AWG X 2

Convenience
- System energy consumption can be viewed using the Samsung SmartThings mobile app or on the indoor unit display using the included wireless controller**
- Auto Clean Function
- 7-segment digital display on front of unit to display temperature and unit status
- Auto changeover
- Good Sleep mode
- Dry mode
- Simple ON/OFF time function – Using the wireless controller specify the ON and/or OFF times
- Electro-static, washable, main filter as standard accessible from the top of unit
- Filter cleaning reminder

Compatibility
- Refer to the FJM outdoor unit submittal data or technical data book for complete compatibility listings.

© 2023 Samsung HVAC

Intertek

Samsung WindFree™* 3.0, wall mounted evaporator

Indoor unit dimensional drawing
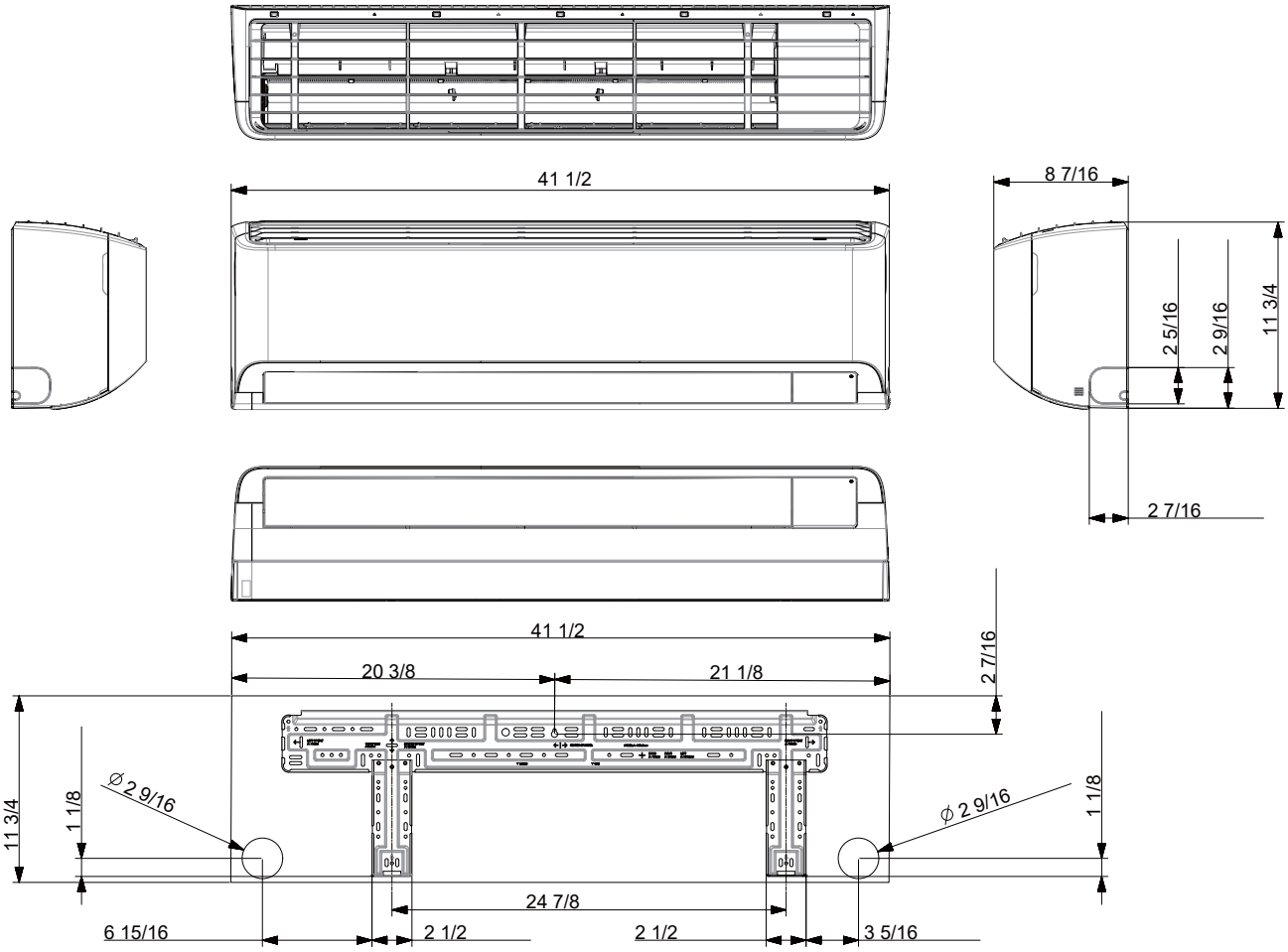
Unit: inches